

1

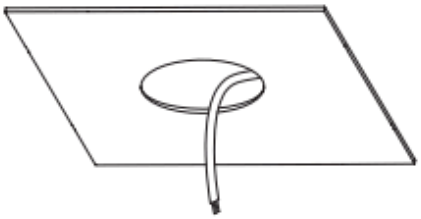

Made cut hole in ceiling accordingly to it's size and make wiring from the power outlet.

2

Connect the AC wire from driver to power outlet.

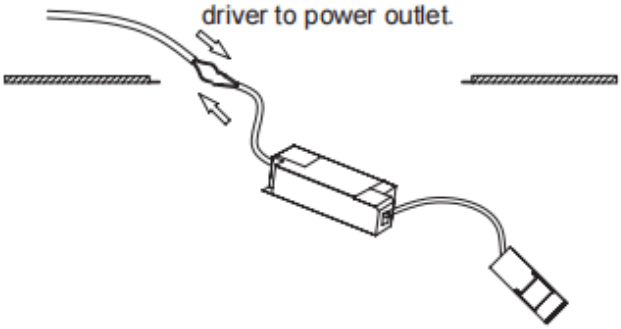

3

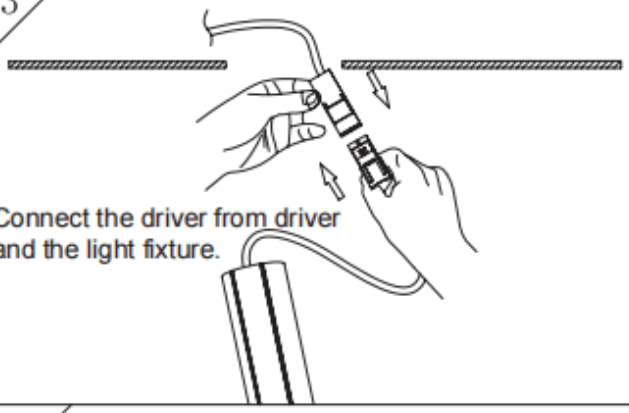

Connect the driver from driver and the light fixture.

4

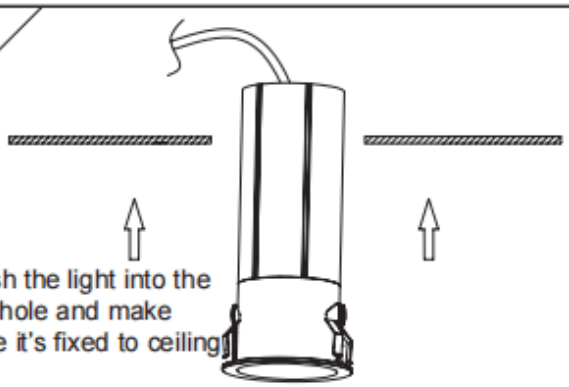

Push the light into the cut hole and make sure it's fixed to ceiling.

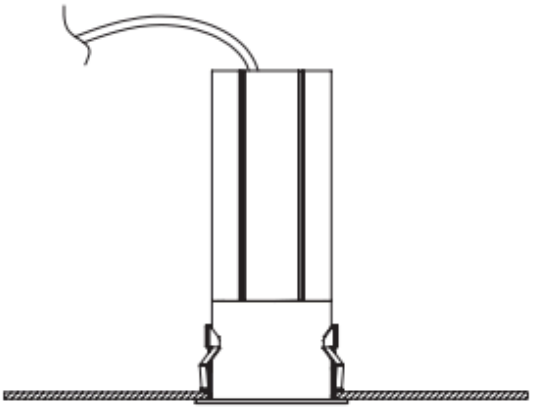

5



Installation completed.